32-5012

MANUAL of Operating & Maintenance Procedures for

DC SECONDARY VOLTAGE STANDARD

Model 8100

DATA PRECISION

...years ahead

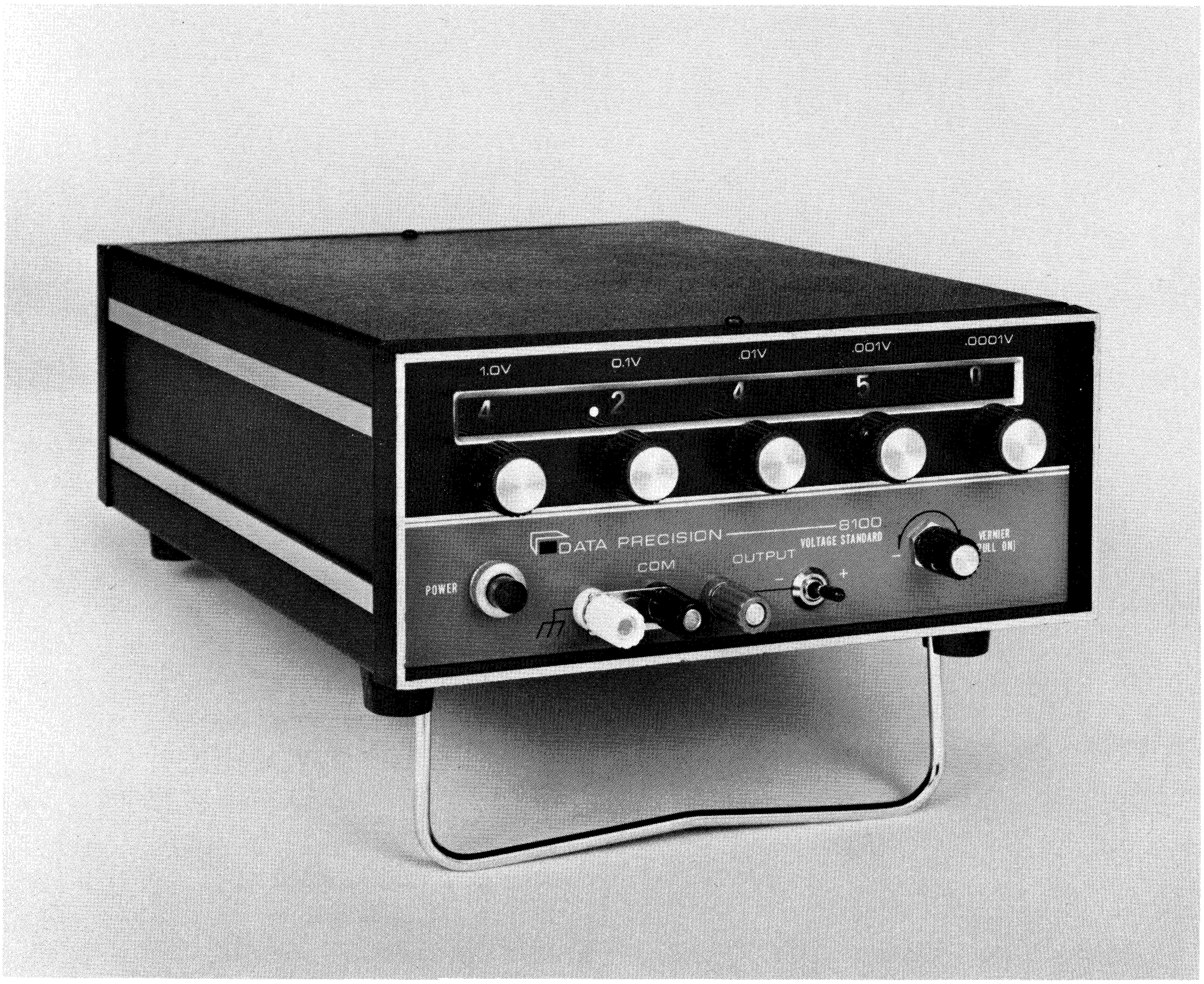
1.0V
0.1V
.01V
.001V
.0001V
DATA PRECISION
6100
VOLTAGE STANDARD
COM
OUTPUT
POWER

VS8100
INSTRUCTION MANUAL
TABLE OF CONTENTS

1.	Introduction	1
1.1	General Description	1
1.2	Certificate of Conformance	1
1.3	Specifications	2
2.	Operating Instructions	5
2.1	Unpacking	5
2.2	Operating Controls and Indicators	5
2.2.1	Front Panel Controls and Indicators	5
2.3	Operation	7
2.3.1	Warm Up	8
2.3.2	Grounding	8
2.3.3	Output Impedance and Loading	10
3.	Principles of Operation	11
3.1	Calibrated Output	11
3.2	Functional Block Diagram	11
3.2.1	AC Input Circuit	11
3.2.2	Power Supplies	11
3.2.3	Servo Loop Voltage References	11
3.2.4	Block Diagram	12
3.2.5	Vernier Control	14
3.2.6	Chopper Stabilized Amplifier	15
3.2.7	Output Circuit	15
4.	Maintenance	17
4.1	Recalibration	17
4.2	Field Maintenance	17
5.	Parts List and Schematic Diagram	21

1. Introduction

MODEL 8100 VOLTAGE STANDARD (VS8100)

The DC Secondary Standard is delivered fully calibrated and ready to serve within its certified accuracy for a duration of six months before requiring recalibration against primary standards. After unpacking, the line voltage selector switch on the rear panel should be set to 115 or 230 volts as appropriate. The VS8100 is ready for use; however, material in this manual will be informative and valuable for proper instrument application.

1.1 General Description

1.1.1 Review of VS8100 Features:

- Dual five decade output ranges
  ±11.1110 with 100 μV resolution
  ±111.110 with 1 μV resolution
- Accuracy 0.005% of reading ±50 μV @ 20°C ±0.0002%/°C
- Warm up to rated accuracy in less than 10 minutes
- High output current of 50 mA; short circuit proof
- 10 milliohm output impedance (100 ohms on low output range)
- No maximum external load capacity
- Isolated circuitry is unaffected by common mode voltages up to ±500 V
- Front panel ±1 mV vernier

1.1.2 Review of Your New In-House Capability:

Because of the portability and fast warm up of the VS8100 you can use it on site to:

- Calibrate absolutely to 50 PPM
- Normalize to 25 PPM
- Standardize to 15 PPM
- Verify linearity to 25 PPM
- Monitor drift to 5 PPM
- Establish regulation to ±1 μV

1.2 Certificate of Conformance

A certificate of conformance containing factory inspection test results is packed with each VS8100 DC Voltage Standard. This document should be retained in a log or file record for this instrument. It will serve to assure the NBS traceability of absolute accuracy, to provide a table of output voltages for recalibration comparisons, and to outline the factory test procedures used in determining these values.

1.3 Specifications

OUTPUT CHARACTERISTICS

VOLTAGE RANGE

Main Output: 0 to ±11.1110 volts at front terminals

Auxiliary Output: 0 to ±111.110 millivolts at rear panel terminals

CURRENT CAPABILITY – MAIN OUTPUT

0 to 50 milliamperes. Short-circuit proof. No restrictions on load capacitance.

ABSOLUTE ACCURACY (at 23°C)

50 PPM of reading, ±50 μV (Includes 6-month stability and linearity.)

LONG-TERM STABILITY:

±15 PPM, 60 days

LINEARITY:

within ±25 PPM

TEMPERATURE COEFFICIENT:

2 PPM/°C

RESOLUTION:

Main Output: 100 microvolts (5 dialable, in line digital decades, and ±1 mV vernier)

Auxiliary: 1 microvolt

OUTPUT IMPEDANCE

Main Output:

DC: 10 milliohms (max)

Dynamic: $L \leqslant 10\,\mu H$; $R = 2\Omega$

Auxiliary Output:

DC: 100 ohms

NOISE

(0.001% of reading + 50 μV) p-p

SETTLING TIME

$V < 300$ milliseconds

ISOLATION

Output may be floated up to 500 VDC (maximum) above or below chassis ground.

WARM-UP TIME

Less than 10 minutes, to rated accuracy. For reduced accuracy of ±0.02%, no warm-up time is required.

RECALIBRATION INTERVAL

6 months, for rated performance

TEMPERATURE RANGE

Operating: 0° to +60° C
Storage: -25° to +85° C

HUMIDITY

0-85% RH, non-condensing

POWER REQUIREMENTS

117/234 VAC, 47-420 Hz. 10 W max. (RF filter included)

DIMENSIONS

3-1/2"H x 8-1/2"W x 12"D (Adapter for 19" rack mounting available as an option.)

CONSTRUCTION

The AN3100 is housed in a bench-mounting, 3-1/2"H x 8-1/2"W x 12"D, aluminum-alloy case equipped with carrying handle. The five voltage decades are controlled by front-panel control knobs.

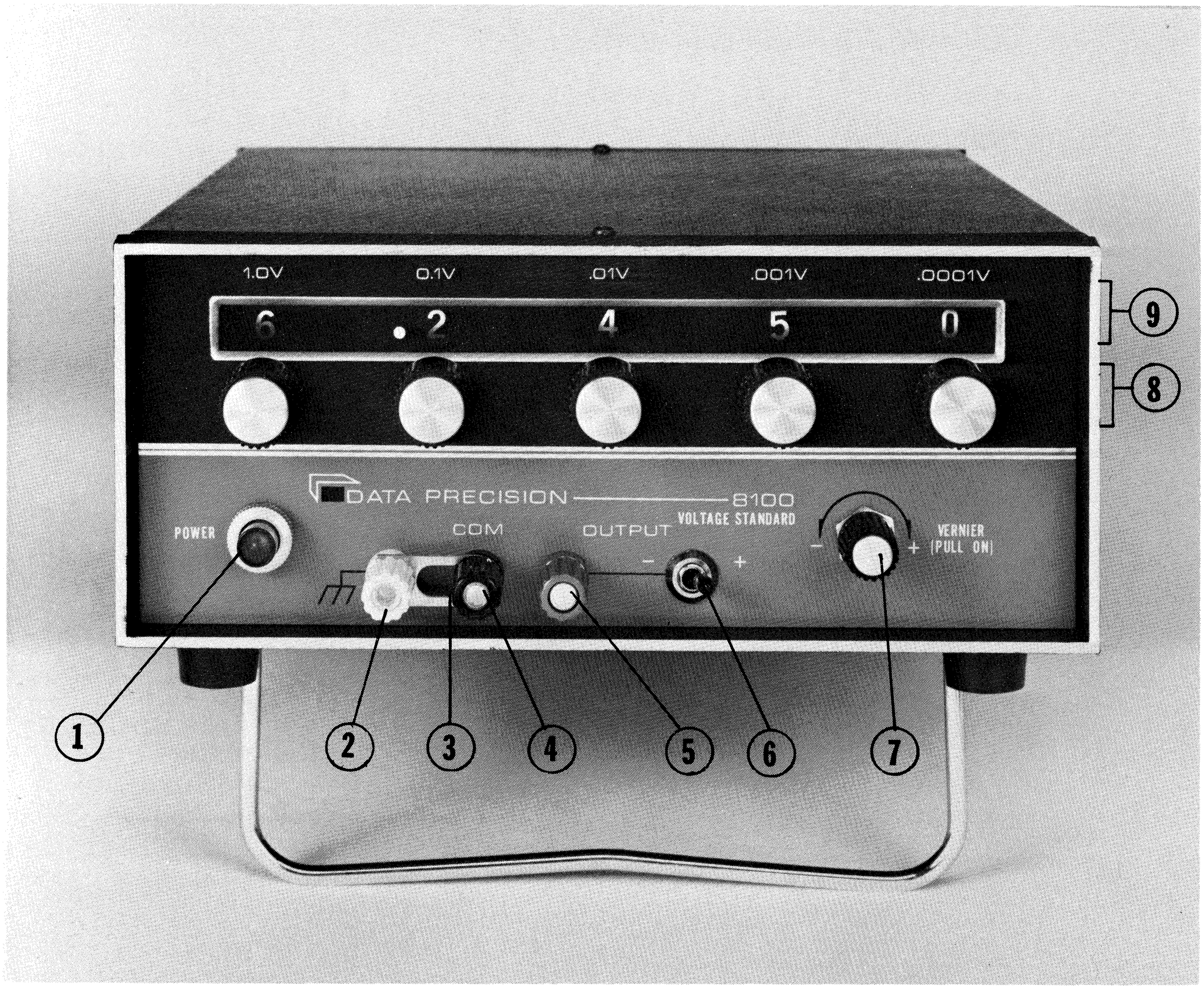
1.0V
0.1V
.01V
.001V
.0001V
6
.2
4
5
0
9
8
DATA PRECISION
8100
VOLTAGE STANDARD
POWER
COM
OUTPUT
VERNIER
(PULL ON)
1
2
3
4
5
6
7

2. Operating Instructions

Although operation of the VS8100 DC Voltage Standard is quite straightforward, attention to the precautions outlined below will ensure optimum performance.

2.1 Unpacking

Immediately upon receipt of the Analogic VS8100 the carton and contents should be closely inspected for any obvious shipping abuse. Such damage should be called to the attention of the carrier immediately.

Additional checks should be made to assure that all parts are secure and that the instrument is free of rattles. A quick check of the delivery will include these components:

1. VS8100 DC Voltage Standard
2. VS8100 Instruction Manual
3. Warranty Certificate
4. NBS Traceability Certificate
5. Mating plug to MV OUTPUT socket
6. Ground link for front binding posts
7. Other options as specified on the bill of lading.

2.2 Operating Controls and Indicators

2.2.1 Front Panel Controls and Indicators

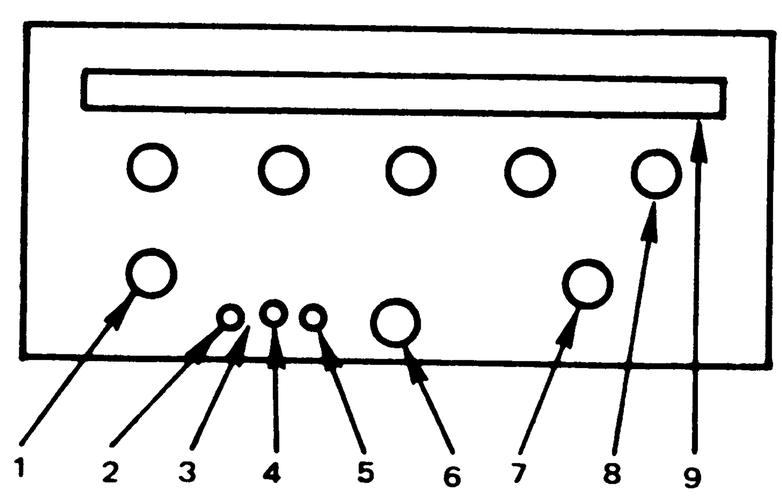

Ref.	Designation	Component	Function
1	POWER	Push-Push switch, S8	Applies AC source power to VS8100 power supply circuitry. Self-contained lamp is lit when power is ON.
2	⏚	White banana plug receptacle and binding post, J3	Provides direct connection to power cord ground wire and instrument housing.

Ref.	Designation	Component	Function
3		Shorting link	A convenience link for referencing the output voltage to ground.
4	COM	Black banana plug binding post terminal, J2	One side of output DC voltage. Low side for positive voltage output.
5	OUTPUT	Red banana plug binding post terminal, J1	One side of output DC voltage. High side for positive output.
6	(- 0 +)	Three position switch, S6	Selects the polarity of the voltage at the red output terminal. When in the center "0" position the DC source is disconnected from the OUTPUT and COM terminals.
7	VERNIER	Push-pull rotary knob, R27, S9	Dialed output is delivered when the knob is snapped in. Dialed output ±1 mV is delivered when vernier is pulled out.
8		Eleven position rotary decade selector switches, S1 (MSB), S2, S3, S4, S5 (LSB)	Independent selection of the values in each of 5 decades. Maximum of "10" in each position corresponds to 11.1110 volts. 330° rotation.
9	( ) V display	Five in-line rear lighted displays, DS1, DS2, DS3, DS4, DS5	Displays selected value in each decade. Eleven possible values 0 through 10, inclusive.

2.2.2 Rear Panel Components

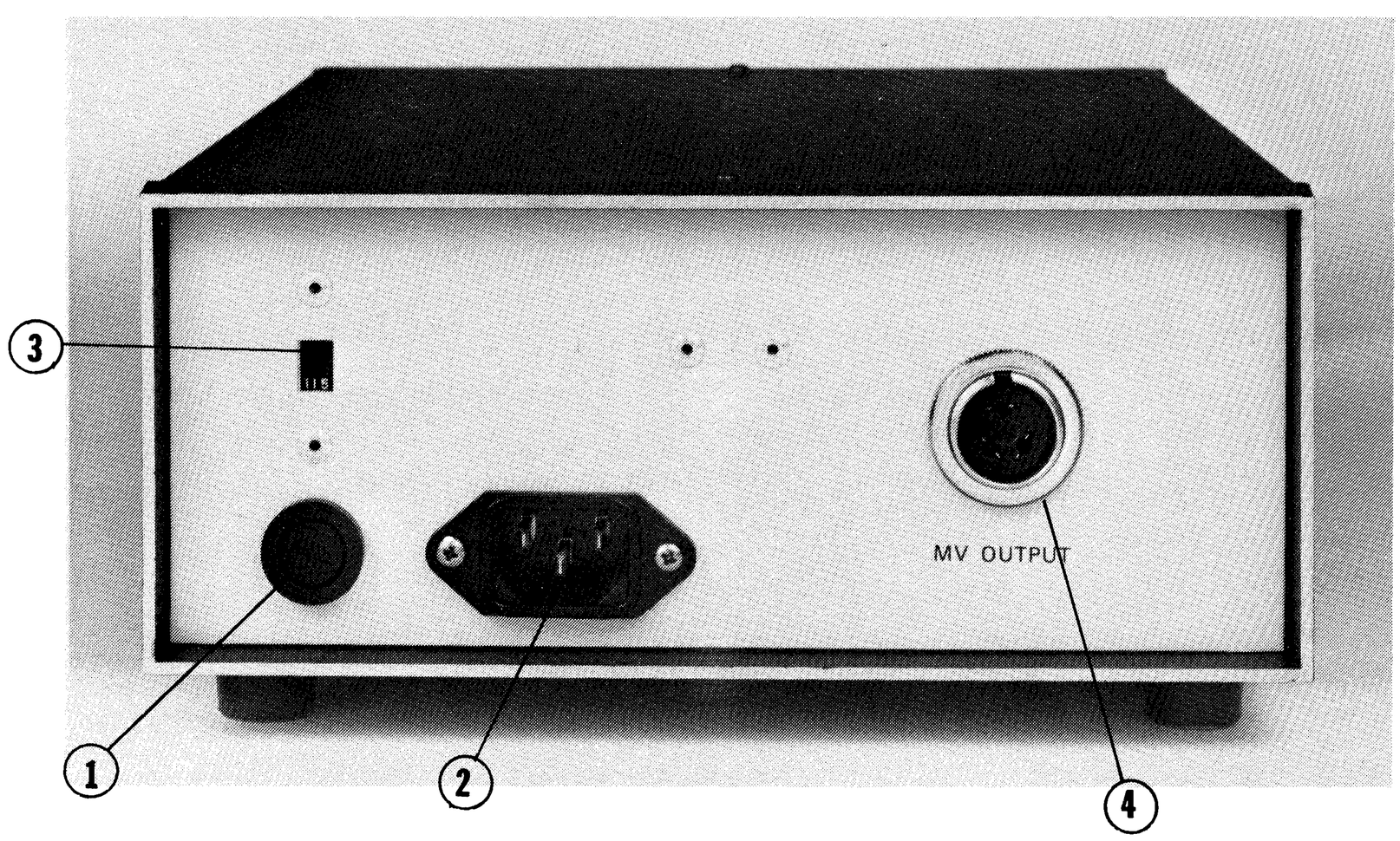

Ref.	Designation	Component	Function
1	1/4 Amp Fuse	Slotted cap fuse holder, F1	Instrument protection against AC line current in excess of 1/4 amp. Replace fuse with 3AG type.
2	AC IN	Connector for three-wire line cord	Power in. Case ground.
3	115/230	Slide switch, S7	Sets up transformer taps appropriate to 115V AC or 230V AC operation.
4	MV OUTPUT	Three pin socket, J4 (Mating plug supplied)	Low range output voltage. Pin 1: Provides direct connection to power cord ground wire and instrument housing. Pin 2: Provides 1/100 of the voltage present at the Red front binding post (OUTPUT). Pin 3: Direct connection to Black binding post on front panel (COM).

2.3 Operation

The VS8100 is designed for simple operation. After checking to see that the unit has been preset for the appropriate AC mains voltage (115V or 230V), the unit may be connected to the power and turned on. Connections between the VS8100 and the associated circuitry should be made with a shielded twisted pair of the shortest length feasible. Good grounding practices are described in the paragraph on grounding (2.3.2).

The desired output voltage is dialed, displayed, and connected to the OUTPUT and COM terminals with the former terminal having the polarity as selected by the (- 0 +) switch. If this switch is in the center position the reference voltage is disconnected and a short circuit will exist between these terminals.

Each dial is rotatable over 330° and stops at any one of eleven detents (zero to ten inclusive). Note by comparison the ease of stepping voltages as compared to the usual decade switch. To increase the output from 1.0999V to 1.1000V the procedure would be:

Usual decade:	1.0999	VS8100 decade:	1.0 9 9 9
	1.1000		1.0 0 0 10

Value of Output Voltage in Scientific Notation

Let: D = Displayed Digit

Then: on any decade $0 \leqslant D \leqslant 10$

And: $E_{out} = D \cdot 10^{x}$ The value of x corresponds to the dial position and whether the front or rear output voltage is being considered (see box next page).

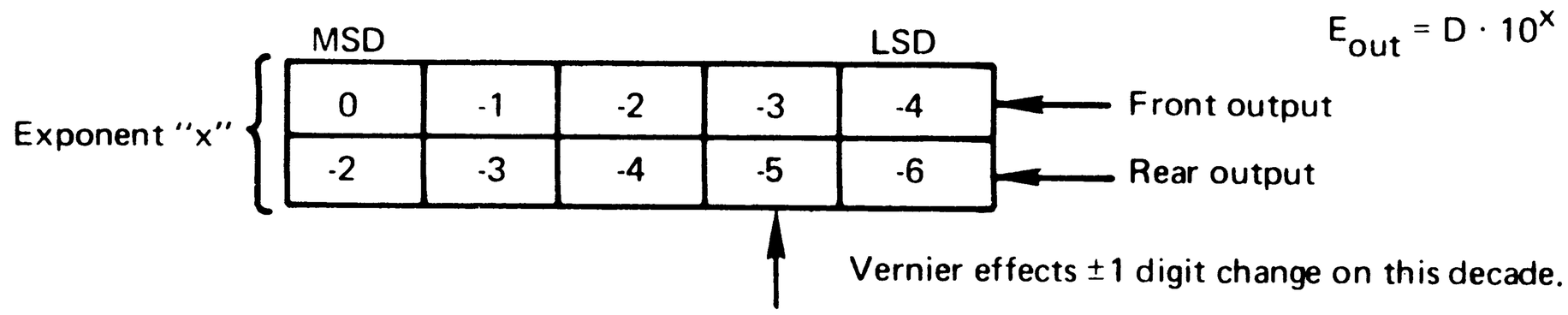

2.3.1 Warm Up

The VS8100 warms up to full rated accuracy within ten minutes of turn on. This is the time that is required for the oven temperature to stabilize. Output voltages are available for immediate use after turn-on but at a reduced accuracy of 0.02% of Reading.

2.3.2 Grounding

The case of the VS8100 is connected to the grounding pin on the three wire AC mains receptacle. Additionally, the white binding post terminal on the front panel and pin 1 of the low voltage output on the rear panel are tied to this chassis ground. However, through the use of isolated power supplies and an electrostatically shielded power transformer, the DC output can be externally offset to voltages within ±500 volts of ground. Voltages referenced to the AC mains ground are attained by attaching the shorting link between the COM side of the output and the white binding post. Positive and negative output values should be selected by the (- 0 +) switch in preference to other arrangements of front panel shorting straps. Care should be exercised to avoid double grounding as might arise when both the front output and rear output voltages are tapped. These two outputs are not isolated from each other and incorrect grounding may cause the 100:1 voltage divider to become bypassed.

Grounding Practices

When the circuit to be driven by the VS8100 DC Voltage Standard has one end grounded to the AC mains ground, then the shorting link should be removed from the VS8100 to prevent ground loop currents from generating offset values contributing to erroneous DC voltages (see Figure 2-3).

When the circuit to be driven by the VS8100 DC Voltage Standard is not grounded to the AC Power Ground, then a connection of the low side to case ground is desirable. This recommendation is especially useful in noisy environments or whenever large AC voltages are present between the VS8100 case and the internal circuitry. The grounding connection is made to the VS8100 via the case ground binding post terminal. If the load may be grounded, then the connection of Figure 2-4 or 2-5 may be used. The hook up without the shorting link is preferred.

When the load must remain DC-isolated from AC power ground, then the case-to-circuit AC voltage may be grounded effectively by a 0.1 μf capacitor between COM and case ground as shown in Figure 2-6.

Rear Panel Output Grounding

Whenever the rear output voltage is to be referenced to ground, no grounded load should be simultaneously applied at the front terminals. The discussion on grounding practices above can be applied to the 111.110 millivolt range. Rear connector pin 2 is analogous to OUT and pin 3 to COM; pin 1 is connected to case ground.

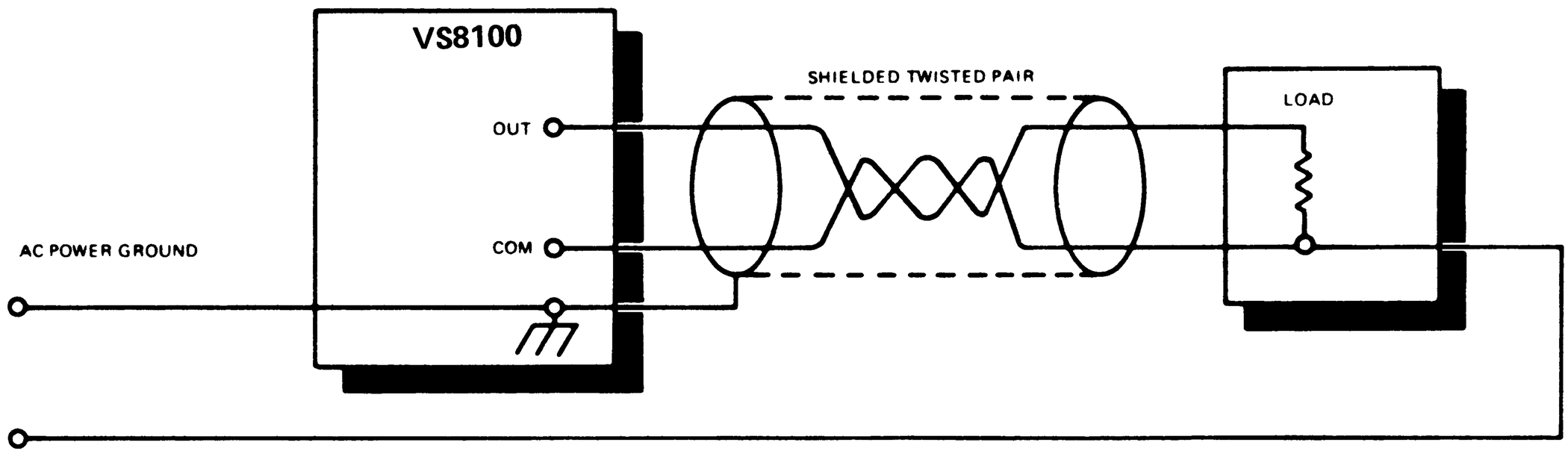

Figure 2.3

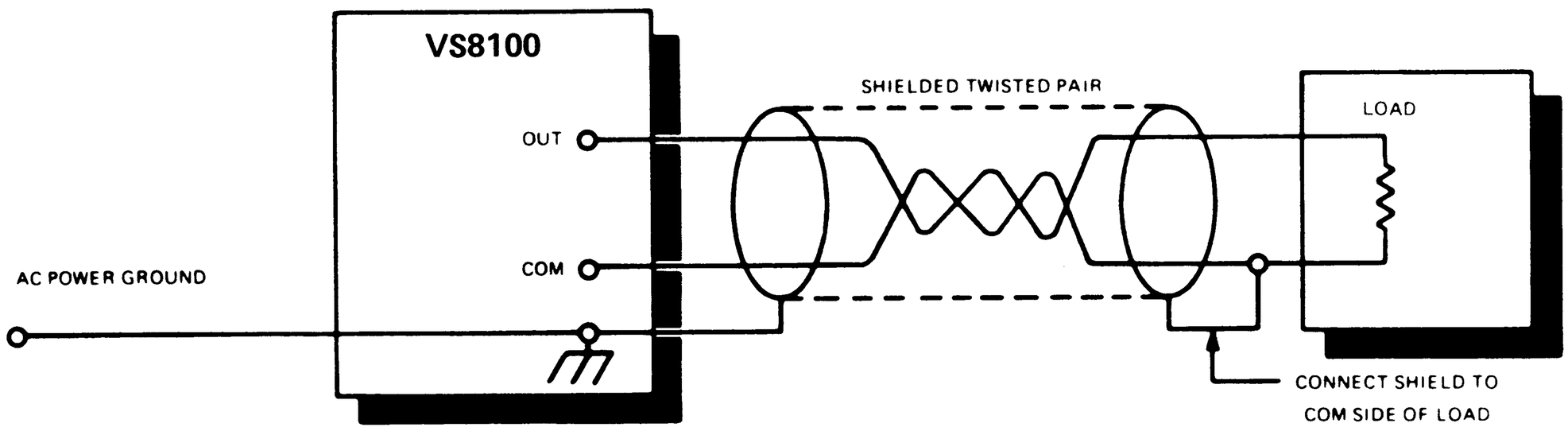

Figure 2.4

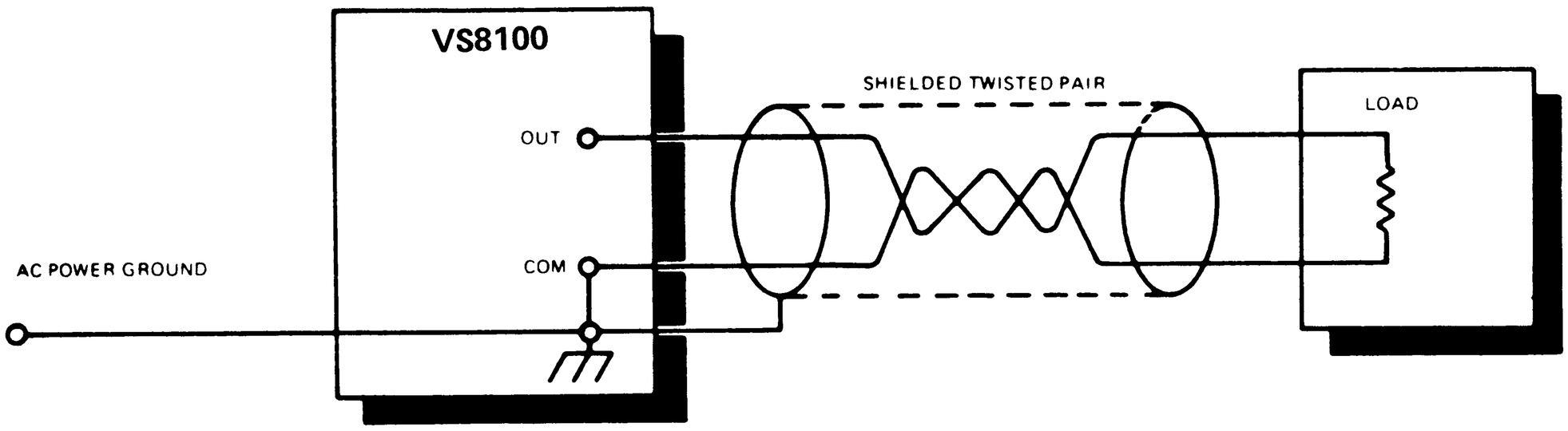

Figure 2.5

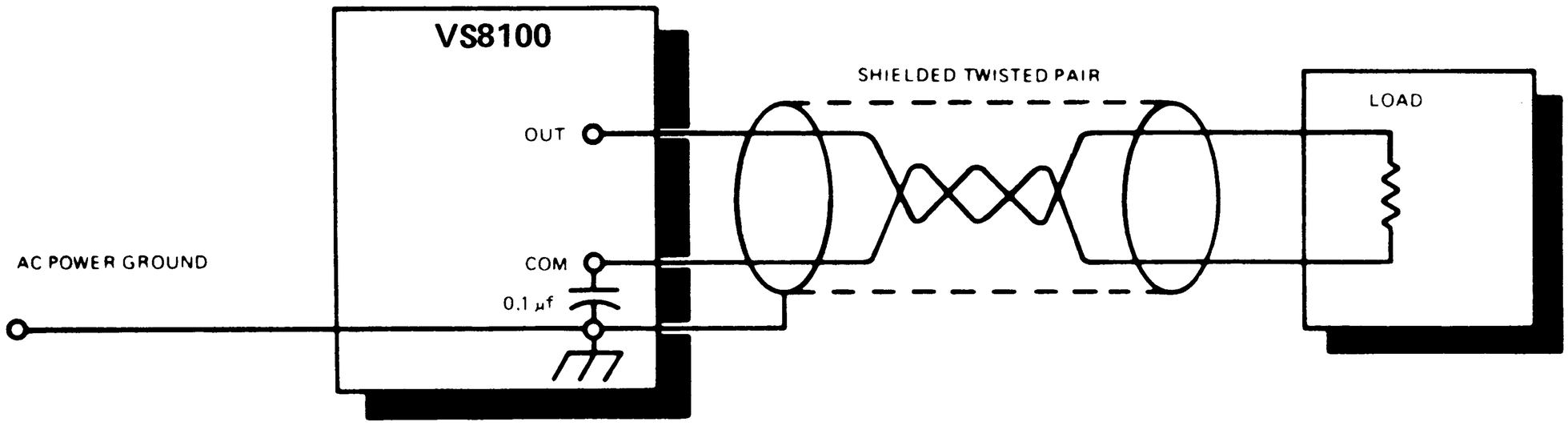

Figure 2.6

2.3.3 Output Impedance and Loading

Front Panel Output

The use of an operational amplifier and a transistorized power stage at the output of the VS8100 reduces the output impedance to a level of a few milliohms. The specification of 10 milliohms DC resistance is a worst case value which takes contact and terminal resistances and aging effects into account. For consideration, a quick Ohm's Law calculation will show that in the worst case, the internal voltage drop could result in a one least-significant-digit error under a 10 mA load current at 10.0000 dialed volts. Consequently, loading errors most normally will be less than the least significant digit when the higher output range is being used.

Rear Panel Output

The internal voltage drops which result from drawing current from the rear output terminals may be precisely and accurately calculated using Ohm's Law. The voltage divider is configured to provide a Thevenin resistance of 100.00 ohms. Any current drawn from this terminal which exceeds 0.1 μA will require a correction for this I x R internal drop if the full five digit precision is to be utilized.

2.3.4 Vernier Operation

When it is necessary to obtain a voltage of greater resolution than the 100 microvolt increment normally available in the decade switches, the built in vernier control is engaged. This will provide continuously variable values of voltage ±1 mV ±15% above and below the dialed setting (±1 digit on second least-significant-digit knob).

To use the VERNIER adjustment,

a) Dial the voltage within ±1 mV of the expected final value.
b) Pull out the VERNIER control knob on the front panel.
c) Operate the VERNIER control until the desired value is obtained. (The display will read to the nearest 1 mV of the final value.)

Operation of the VERNIER control also affects the output from the VS8100 rear panel connector proportionately. The rear panel voltage variation is continuous over ±10 microvolts range and is applied to the output value which is 1/100 the dialed voltage.

3. Principles of Operation

Tutorial information contained in this section of the manual is designed to permit a calibration technician or repairman to quickly acquaint himself with the full circuit schematic which appears in section 5. Additionally, a more thorough understanding of the design of any instrument allows the user to apply the device to applications beyond those considered traditional.

3.1 Calibrated Output

The VS8100 provides an output as selected by the five dials whenever it is in non-vernier operation. This calibrated output is displayed and delivered to the front binding post jacks. A calibrated output equal to 1/100th of the displayed value is simultaneously delivered to the rear MV OUTPUT connector.

While in vernier operation mode, the instrument is not calibrated to its full five dial precision. The three most-significant-digits are certain. The second least-significant-digit has an uncertainty of ±1; and the least most-significant-digit display should not be interpreted.

3.2 Functional Block Diagrams

3.2.1 AC Input Circuit

The fused AC mains are brought to the two primary windings via the input POWER switch, the 115/230V selector switch, and the power-line noise filter. The transformer itself is electrostatically shielded and grounded to the case and earth ground via the third wire of the AC line plug. Switch S7 parallels the primary windings for 115 volt operation and connects them in series for 230 volt use. The 115 volts used for the neon displays are tapped across one of these primary windings. The same is true for the lamp in the POWER switch which indicates the "power on" condition. Capacitor C22 and chokes L1 and L2 filter noise from the incoming AC current.

3.2.2 Power Supplies

The transformer contains two secondary output windings, one for 17V AC, the other for 7V AC. Both are rated for 0.4 amp. The two windings are series connected to supply 24V AC for the reference oven. Two half-wave rectifiers are used to develop the ±15V DC.

The 17-volt secondary is half-wave rectified in dual circuits, heavily filtered by the 500 μf capacitors, producing ±18V input to the regulating circuits. Regulation for the +15V supply is obtained through the action of Q8, whose control is developed by the voltage divider network of the reference diode CR12 and resistor R22. Regulation for the -15V supply is accomplished in a more sophisticated circuit including feedback amplifier A3, and control is exercised through transistor Q7. The more precisely regulated -15V supply is used to drive the reference Zener Diode CR11 via resistor R28, and provides the isolated reference ground for the VS8100 output.

3.2.3 Servo Loop Voltage Reference

The stability of the VS8100 results from the servo loop circuitry surrounding the oven enclosed reference diode. This diode has been selected and aged prior to installation and selected resistors are then matched to the zener's voltage characteristics. This 6.3 ± 0.1V zener performs two functions. First, it is the reference standard and second, it is the -15V regulator reference. As for its reference function, it may be considered

a sink for a very precise and stable 100 microampere current. The use of a single diode to accomplish these two functions improves the circuit's performance as a precise and stable current sink.

Amplifier A3 regulates the current in the zener reference diode and provides protection against voltage fluctuations. This feature combined with matched wire wound resistors enables the VS8100 to retain its accuracy over six month calibration intervals.

The establishment of the 100 microampere sink current is a function of four closely matched components; namely, CR11, R1, R23, and R50. It is this current which generates the desired standard voltage as it passes through the precision decade resistance network. This voltage is then amplified in amplifier A1 and delivered to the output.

Other component functions in the reference circuit are:

C18	Amplifier stabilization
C19, R23	Amplifier stabilization
C27	Loop stabilization

3.2.4 Block Diagrams

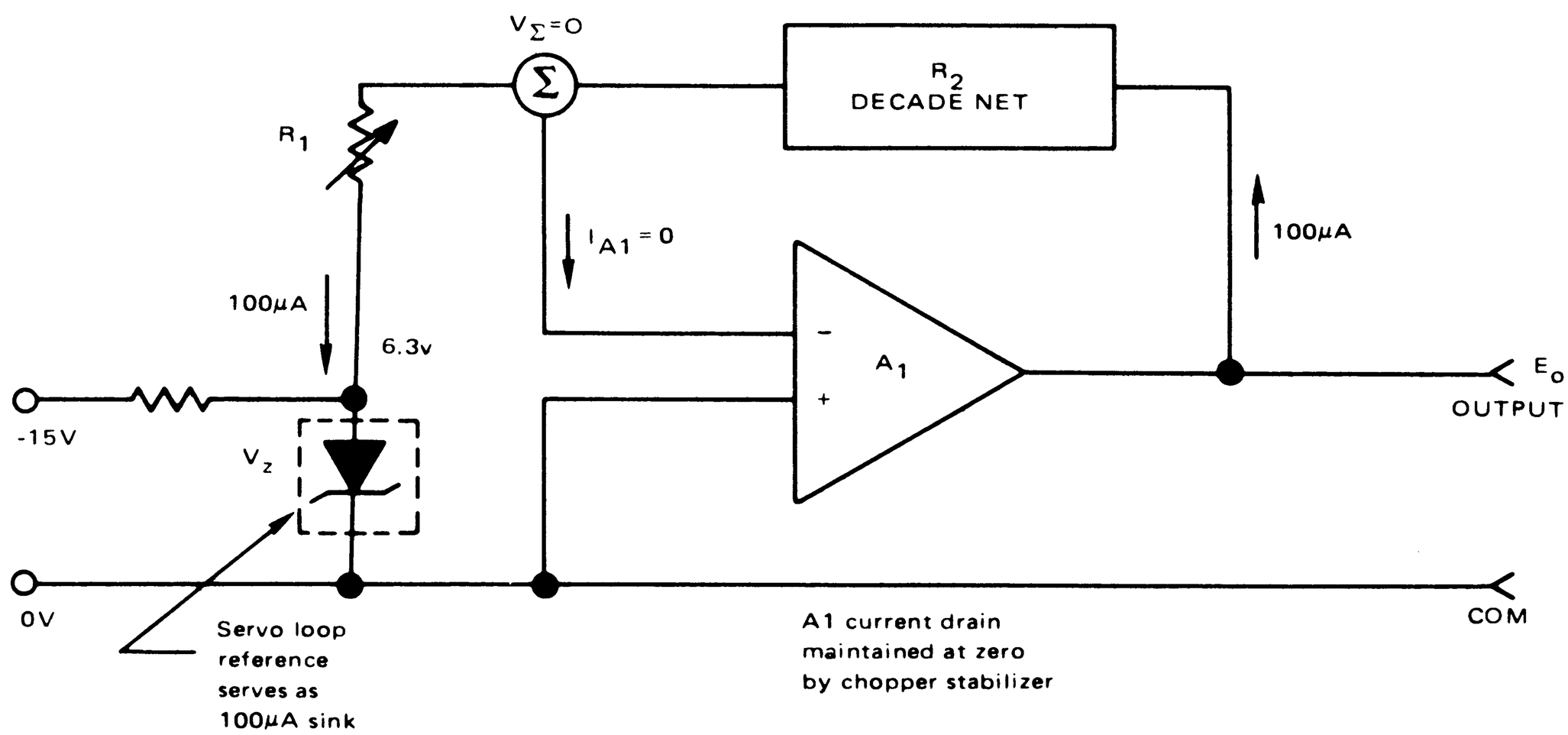

Figure 3.2.4.1 Reference Voltage Generation

The stability and accuracy of the Model 8100 Voltage Standard derive from the use of a chopper-stabilized, ultra-high-gain operational amplifier, with a precisely calibrated five-decade resistive feedback selector for regulation of the DC output voltage. See Figure 3.2.4.1.

The chopper-stabilized amplifier functions as a simple operational inverter. Because of the high-gain negative feedback from its output to its input via R_2, the Summing Point (Σ) is held at zero volts to an uncertainty of a few parts in 10^8, and the output voltage E_o is therefore a simple function of the input voltage V_z.

The equation for voltage to the left of the summing point (Σ) is:

Eq. 1 $$V_\Sigma = V_z + I_{R1} R_1$$ and

This same voltage taken to the right of the summing point is:

Eq. 2 $$V_\Sigma = E_o - I_{R2} R_2$$

Solving both equations for the current terms yields:

Eq. 3 $$I_{R1} = \frac{V_\Sigma - V_z}{R_1}$$

Eq. 4 $$I_{R2} = \frac{E_o - V_\Sigma}{R_2}$$

These currents are equal because the current drawn by amplifier A_1 is maintained at zero by the chopper stabilizer. Equating Equation 3 to Equation 4 yields:

Eq. 5 $$\frac{E_o - V_\Sigma}{R_2} = \frac{V_\Sigma - V_z}{R_1}$$

The second function of the chopper stabilizer is to maintain the voltage at the summing point at zero volts. Substituting:

Eq. 6 $$V_\Sigma = 0$$ into equation 5 yields:

Eq. 7 $$\boxed{E_o = -V_z \frac{R_2}{R_1}}$$

In the Model8100, V_z is a fixed DC Voltage of extremely high stability, established by an oven-calibrated, highly compensated, selected, aged, and "pedigreed" zener-diode reference source. The effective temperature coefficient of the oven/zener combination is so low, and the time stability of the zener diode is so high, that the major uncertainty in the output voltage, E_o, is determined by the ratio of R_2 to R_1.

The trimming portion of R_1 is initially adjusted to draw a steady current of precisely 100 microamperes from the summing point; the amplifier holds the summing point at zero by adjusting its output voltage to supply the identical current through R_2. Since $E_o = I_{R2} R_2$, and I_{R2} is constant at 100 microamperes,

the output voltage E_o of the amplifier is adjustable with an accuracy, and a resolution, limited only by the accuracy and resolution of the feedback resistor R_2 (which in the VS8100 is a five-decade resistance adjustable in one-ohm steps from 0 to 111.110 ohms). The ratio R_2/R_1 is stable to 20 ppm/year, and the linearity of setting of R_2 is well within 25 ppm/year.

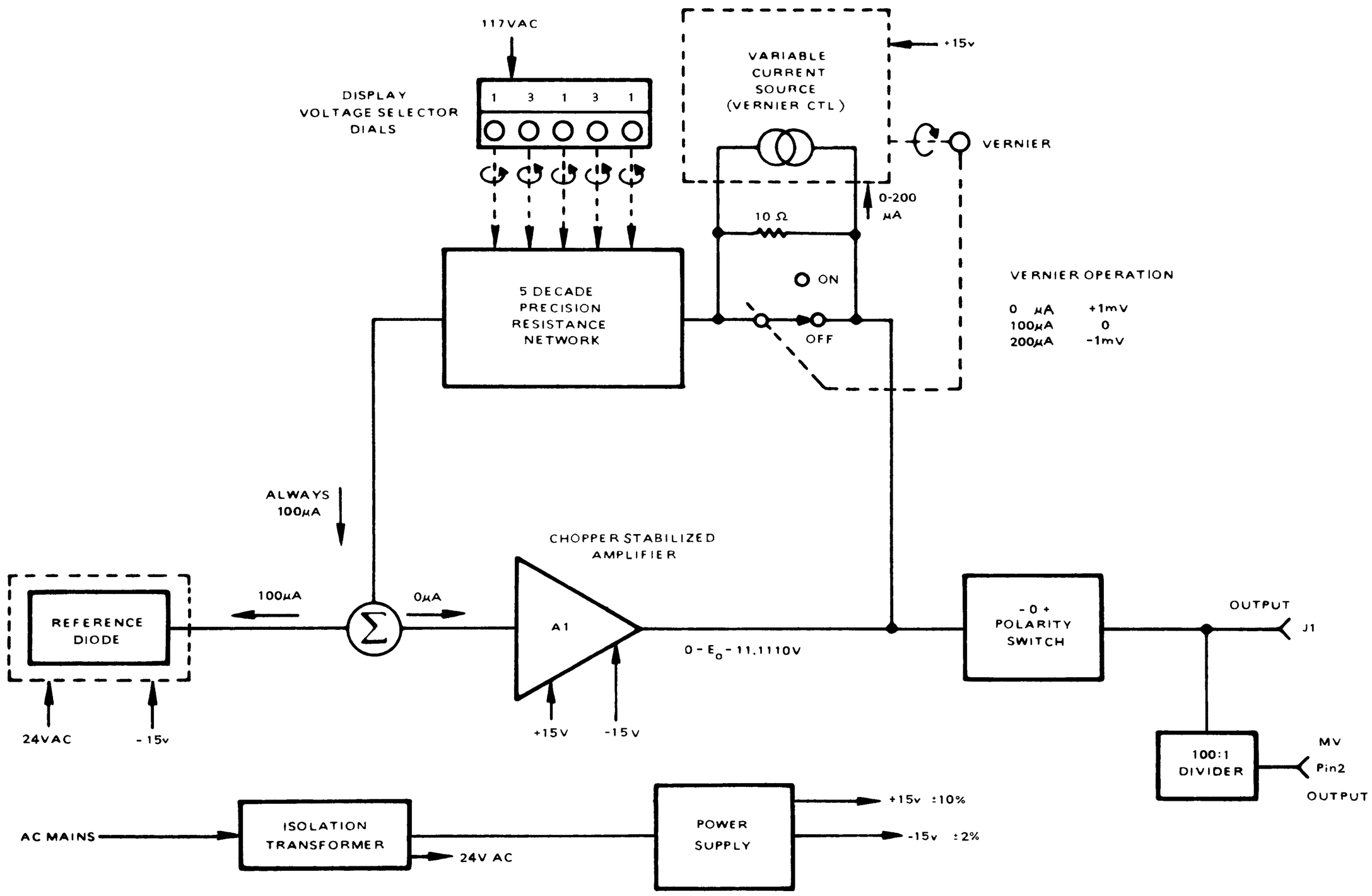

Figure 3.2.4.2 Simplified Block Diagram

3.2.5 Vernier Control

For applications in which extreme resolution (narrow-range) may be required—for example, when the VS8100 is employed to measure an unknown voltage by matching, with the aid of a high-sensitive external null detector—the desired setting may lie somewhere between two of the smallest digital settings of the instrument. For this purpose, a continuously variable ±1 mV vernier adjustment has been incorporated, as indicated in Figure 3.2.4.2. For routine operation, the variable current generator and the 10 ohm resistor are shorted by switch contacts. When vernier adjustability is required, the vernier control knob on the front panel is pulled outward; this unshorts the 10 ohm resistor, placing it in series with the feedback loop. The variable current source is adjustable from 0 to 200 microamperes, this producing, in conjunction with the 10 ohm resistor, a voltage variation from -1 to +1 millivolt, and an equal variation in the nominal value of the output voltage E_o (± 10 μV in the auxiliary output voltage).

3.2.6 Chopper Stabilized Amplifier

The function of amplifier A1 is to provide unity voltage amplification of the precision signal voltage developed across the decade resistor network. It must perform this task without drawing any current away from the 100 μA sink previously discussed. It is therefore of prime importance that the possibilities of offset voltage drift (and consequent current changes) be reduced to values well below those which would impair instrument accuracy. The input of amplifier A1 (inverting input pin 2) is kept at approximately zero volts. Any change from this value and signal ground is sensed by the high gain amplifier in the chopper circuit and delivered back as a differential (correction) voltage at pin 3 of amplifier A1.

The chopper circuit is comprised of these primary components:

Q3, Q4	Multivibrator of approximately 200-300 Hz (clean square wave)
Q1	Input synchronous switch, modulator (Mosfet)
Q2	Output synchronous switch, demodulator (bipolar)
R32, C5, CR3	Output conditioning circuit
A2	High gain (Av > 2000) operational amplifier
R58	Loop gain
C8, R34, C10	Stabilization

3.2.7 Output Circuit

The polarity of E_o presented at J1 (red binding post) and pin 2 of MV OUTPUT is selected by the (- 0 +) switch. This three position polarity reversing switch may serve as a standby switch when left in the center position or may be used to provide step functions of preselected values of either polarity.

The specified output current of 50 milliamperes applies only when the VS8100 is used as a source. The current sinking capability of the circuit is approximately 3 milliamperes, but may be increased by preloading the output.

Rear panel output is tapped directly from the front binding post terminals. Resistor R17 (10,000 Ω) is matched to resistor R18 (101.01Ω) to provide division of E_o by a precise factor of 100. The Thevenin equivalent resistance at this output is also precisely 100.00Ω. The result is an output voltage variable in discrete one-microvolt steps over a range of 0 to 111.1110 millivolts. Engagement of the vernier allows finer resolution giving $\pm$10 μV variations relative to any setting.

4. Maintenance

The VS8100 is designed for maintenance free operation. Its solid state circuitry is designed to dissipate very little heat, thereby reducing failures from that common source. Mechanical maintenance has also been minimized. There are no blowers or air filters to service and all that is required is cosmetic maintenance. Cleaning of the front bezel and display window should be accomplished without solvents as these may adversely affect the plexiglas display window.

Normal maintenance checks should assure the efficacy of the AC plug to case ground wire. This wire serves a safety function in addition to the ground referencing function for output signals (at operator's discretion).

Analogic maintains an in-house reference standards laboratory which will perform recalibration and other maintenance services on Analogic instruments which are returned to the Analogic factory. Such services are performed on a charge basis unless, of course, they are performed under the conditions of the warranty.

4.1 Recalibration

The recommended recalibration interval is six months. The unit may be returned to Data Precision for recalibration, or it can be recalibrated in any standards laboratory with the following equipment (combined errors less than ±0.001%) or equivalent:

1. Galvanometer	Julie Research Laboratories type ND106
2. Potentiometer	Julie Research Laboratories type PVS1000
3. Voltage Divider	Julie Research Laboratories type VD106
4. Primary Standard	Julie Research Laboratories type SCO106

Calibration should be made at 23°C after the unit has been allowed to warm up for approximately one hour. Calibration potentiometer R28 is accessible after removing the four retaining screws and the bottom cover.

1. Set all decade switches to zero, polarity to +, and push in the Vernier knob. Measure the output with the Galvanometer. Zero offset, for which there is no adjustment, should be less than 50 μV. Disconnect the Galvanometer.

2. Set the decade switches to +10.0000V and set the calibration standards to measure +10.0000V. Adjust potentiometer R28 until the VS8100 DC Voltage Standard agrees with the calibration standards.

3. Set the decade switches for +1.0000V and set the calibration standards to measure +1.0000V. Check that the unit agrees with the calibration standards to within ±100 μV (±0.005% ± 50 μV).

4.2 Field Maintenance

Periodic maintenance other than recalibration and cleaning is not required. Should the performance of the instrument become suspect, the repair technician should be able to perform the checks diagrammed in Figure 4.2.1. Minimum test instrumentation will include a simple VOM, a simple low frequency oscilloscope, and a 200 Ω resistor for loading. More intense troubleshooting and recalibration will require the NBS traceable instruments mentioned under "4.1 Recalibration." Additionally, a five dial Wheatstone Bridge is a valuable instrument if the problem is in the category of nonlinearity.

VS8100

FIELD MAINTENANCE GUIDE

The following are footnotes relating to the maintenance guide flow chart

NOTE 1. START AND SET UP CHECKS
Check to assure that
- A The 115 230V Switch is properly set
- B The unit is plugged in.
- C The fuse is intact
- D The POWER Switch is operated.
- E The POWER Switch button glows red.
- F The Display Lamps are glowing
- G Some non zero output is dialed.

NOTE 2. INTERNAL CHECKS ARE REQUIRED
Set the (-0+) Switch to (+). Use the BLACK binding post as the reference whenever voltages are to be measured to "ground". Dial an output of 10.0000V. Turn instrument upside down. Remove bottom case cover CAUTION– EXPOSED AC LINE VOLTAGES. CASE IS GROUNDED.

NOTE 3. 30V ± 10% CHECKS OK
Measure 30 V DC ± 10% from the cathode of diode 6 (+) to the anode of diode 9 (-). These are adjacent lands near the power transformer.

NOTE 4. TROUBLESHOOT TRANSFORMER SECONDARY AND POWER SUPPLY ELEMENTS
Measure transformer secondary AC voltages as shown on the schematic. Measure rectifier output voltages and verify the integrity of +15V and -15V bus lines. Check the filter capacitors – heat may indicate excessive capacitor leakage. Peak-to peak ripple voltage should not exceed 10 millivolts on the +15V DC supply or 1 millivolt on the -15V DC supply.

NOTE 5. TROUBLESHOOT OUTPUT WIRING.
Troubleshoot non-printed circuit wiring from both sides of R26 to the output binding posts via Switch S6.

NOTE 6. TROUBLESHOOT MATRIX RESISTANCES AND WIRING.
Check for damaged or broken wiring in the five switch decade matrix. Dial in all zeros and measure zero volts drop across the matrix, or measure the continuity of the feedback path with an ohmmeter (all zeros yields zero ohms, i.e. less than 20 milliohms).

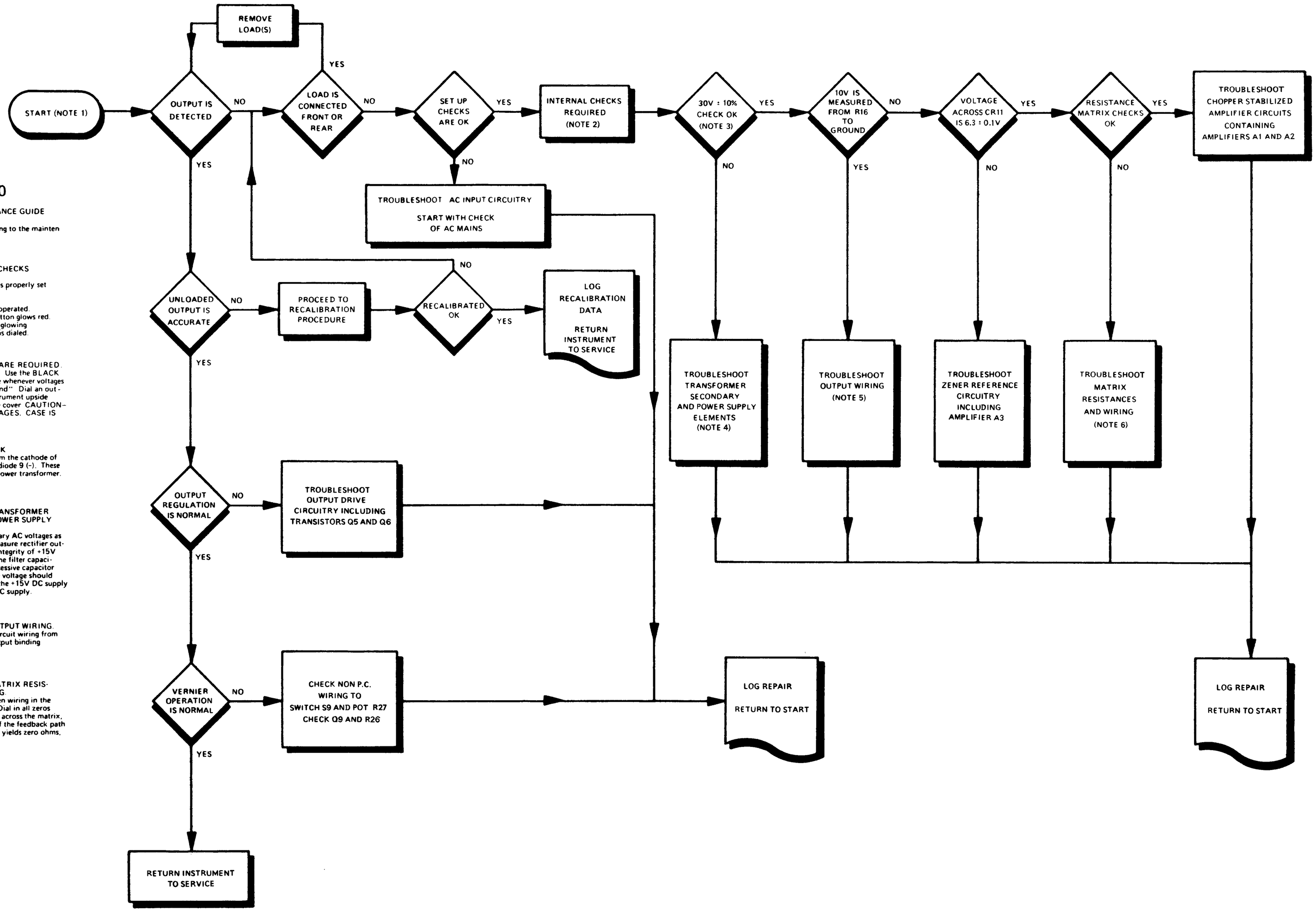

Figure 4.2.1 AN3100 Field Maintenance Procedure

5. PARTS LIST AND SCHEMATIC DIAGRAM

5.2 Parts List

Schematic Designation	Description
Amplifiers	
A1,A3	Operational Amplifier LM307
A2	Operational Amplifier LM301A

Capacitors

Schematic Desig.	Description			Schematic Desig.	Description		
C1	0.1μf	10%	Polycarb	C15	0.01μf	Disc Ceramic	
C2	0.33μf	10%	Polycarb	C16,C17	6.8μf	20V	Tantalum
C5	15μf	10V	Tantalum	C20,C21	0.01μf	Disc Ceramic	
C6	0.1μf	10%	Polycarb	C22	0.005μf	1KV	Disc Ceramic
C7	150pf	5%	Dipped Mica				
C8	3pf	5%	Dipped Mica	C24	6.8μf	20V	Tantalum
C9	6.8μf	20V	Tantalum	C25	0.01μf	Disc Ceramic	
				C26	6.8μf	20V	Tantalum
C11,C12	0.1μf	10%	Mylar	C27	330pf	5%	Dipped Mica
				C28	0.01μf	Disc Ceramic	
C13,C14	500μf	50V	Electrolytic	C29	6.8μf	20V	Tantalum

Resistors

R1	62K	Resistors R1 through R21 must					
R2	50K	be installed as a matched set.					
R3A,3B	20K	Order by	Part A8-1047				
R4	10K	See Note for R1					
R5	5K						
R6A,6B	2K						
R7	1K						
R8	500Ω						
R9A,9B	200Ω						
R10	100Ω						
R11	50Ω						
R12A,12B	20Ω						
R13	10Ω						
R14	5Ω	See Note for R1					
R15A,15B	2Ω						
R16	1Ω						
R17	10K						
R18	101.01Ω						
R19	1.15K						
R20	6.3K						
R21	8.7K	See Note for R1					
R22	5.6K	10%	1/4	W	C.C.		
R24	10K	1%	1/2	W	100 PPM T.C.		
R25	6.19K	1%	1/2	W	100 PPM T.C.		
R26	10Ω	1%	1/2	W	100 PPM T.C.		
R27	Potentiometer 1 K (see Switch S9 listing)						
R28	200Ω	Trim Resistor Electra Midland					
		RJ 24 CW 201					
R29	5.49K	1%	1/2	W	100 PPM T.C.		
R30	100K	10%	1/4	W	C.C.		
R31,R32	499K	1%	1/2	W	100 PPM T.C.		
R34	Jumper						
R35	1M	20%	1/4	W	C.C.		
R36	1.8K	5%	1/4	W	C.C.		
R37	6.8K	10%	1/4	W	C.C.		
R38	18K	5%	1/4	W	C.C.		
R39	47K	5%	1/4	W	C.C.		
R40,R41	68K	5%	1/4	W	C.C.		
R42	4.7K	5%	1/4	W	C.C.		
R43	33.2Ω	1%	1/2	W	100 PPM T.C.		
R44	1K	20%	1/4	W	C.C		
R45	2.05K	1%	1/2	W	100 PPM T.C.		
R46	13.3K	1%	1/2	W	100 PPM T.C.		
R47	390Ω	20%	1/4	W	C C.		
R48,R49	330Ω	20%	1/4	W	C.C.		
R50	Factory Selected						
R51,52,53, 54,55	4.7K	5%	1/4	W	C.C.		
R56	100K	10%	1/4	W	C.C.		
R57	1K	20%	1/4	W	C.C.		
R58	4.7M	5%	1/4	W	C.C		

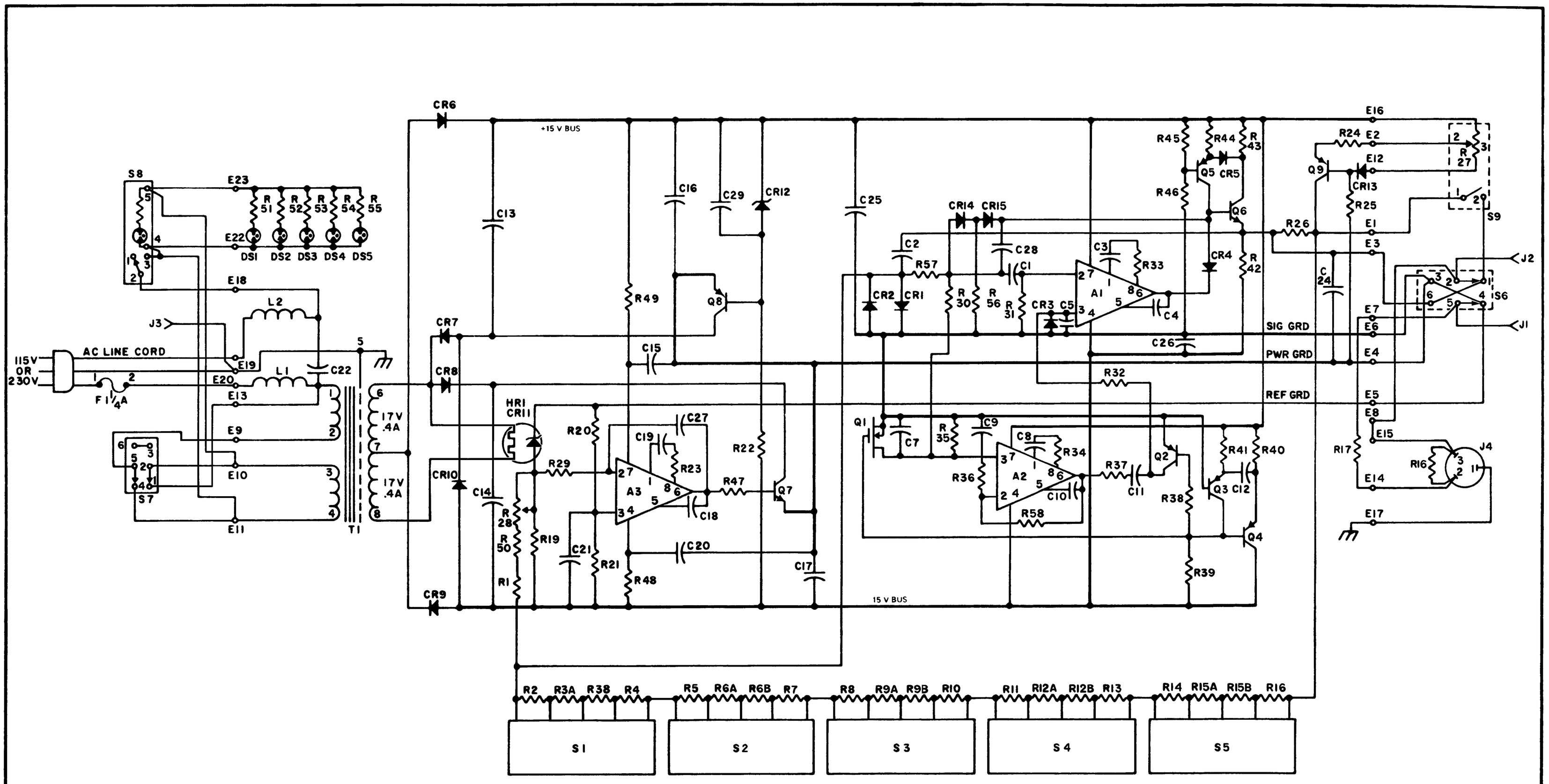

SCHEMATIC DIAGRAM
MODEL 8100
VARIABLE DC SECONDARY
VOLTAGE STANDARD

Schematic Designation	Description
Diodes	
CR1,2,3,4,5,13,14,15	1N 4148
CR6,7,8,9,10	Rectifier Diode 1 amp. 100P.I.V.
CR11	Reference Diode Part 14-130004
CR12	1N 966A Zener Diode
Fuse	
F1	1/4 amp 3AG
Inductors	
L1,L2	Inductor, National Radio 220μ H
Lamps	
DS1,2,3,4,5	Neon Lamps A1C
Oven	
HR1	Klixon Part Number S3T 1-2
Switches	
S1,2,3,4,5	Switch Part 15-400002
S6	Toggle Switch CKW7211SY-Z-GE
S7	Switchcraft 46256-LF
S8	Marco Oak Part 57-41682-26-A1G
S9	Potentiometer & Switch Assembly Part A8-1048
Transformers	
T1	Power Transformer Part 15-151049
Transistors	
Q1	Motorola MFE 3004
Q2,3,4,5,9	2N3906
Q6,Q7	2N 2219
Q8	2N 4918

PUB. NO. 32-5012

DATA PRECISION
Div. of Analogic, Electronics Ave., Danvers Ind. Pk., Danvers, MA 01923

K4XL's BAMA

This manual is provided FREE OF CHARGE from the “BoatAnchor Manual Archive” as a service to the Boatanchor community.

It was uploaded by someone who wanted to help you repair and maintain your equipment.

If you paid anyone other than BAMA for this manual, you paid someone who is making a profit from the free labor of others without asking their permission.

You may pass on copies of this manual to anyone who needs it. But do it without charge.

Thousands of files are available without charge from BAMA. Visit us at http://bama.sbc.edu